Found, not lost (Portable LoRa GeoLogger Node)

MDP S234392, JOBH S234413

Introduction

This device is a portable tracking and communication unit designed to record and transmit movement, position, time, and heading. It supports USB-C and solar charging, operates on an internal battery, and communicates via LoRa to a base station as well as BLE to a mobile device.
The integrated display shows key information such as position, time, and compass heading, and can guide the user back to the base station or their starting point. An onboard IMU enables intelligent power management by activating the GPS only when movement is detected. The IMU can also trigger safety features, such as sending a distress signal after prolonged inactivity.
High level diagram of the Portable LoRa GeoLogger Node:

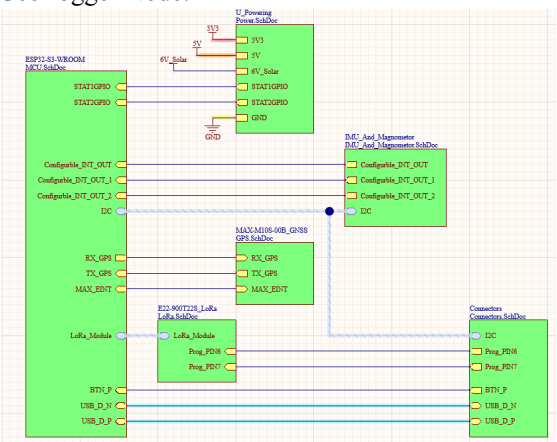

Components justification

MCU: ESPRESSIF-S3-WROOM (4.20-USD)

The ESP32-S3 WROOM module was selected because it provides an ideal balance of processing capability, integrated wireless connectivity, and low-power operation, all at a very competitive price (4.20 USD).
In active mode at 40 MHz, it draws 16.2 mA (single-core) or 18.7 mA (dual-core), which is acceptable because high-power operation only occurs during brief tracking or communication bursts. And can be raised up to 240 MHz for intensive bursts with a current draw of 107.9 mA.

For low-power system states, the ESP32-S3 supports light sleep (240 µA) and deep sleep (8 µA), enabling long standby times and meeting the project requirement for an ultra-low-power state.

Competing MCUs were evaluated:

- STM32W series (with integrated LoRa)
  This would reduce the number of external components; however, it lacks BLE and Wi-Fi, which are critical for the device's smartphone pairing feature. Both BLE and Wi-Fi would need to add another microcontroller, like the nRF52840 or the ESP32 which would make it more complicated and expensive.
- nRF52840 + SX1262 "all-in-one" LoRa/BLE/WiFi modules

These provide excellent low-power performance but are significantly more expensive (14.90 USD), which is undesirable as an expensive ESP32 and LoRa module amounts to the same price or less, which has better performance and integration.

The ESP32-S3 therefore offers the best trade-off between features, power consumption, GPIO's available, and price, while also being widely supported and easy to integrate into a PCB design.

IMU: ADXL345BCCZ-RL7 (1.90-USD)

The ADXL345 was chosen because it provides very low power consumption, flexible activity/inactivity detection, and both I²C/SPI interfaces at a moderate price (1.90 USD).
In normal measurement mode, it consumes 23 µA, and only 0.1 µA in standby, making it ideal for always-on motion detection without significantly affecting battery life.
Key advantages of this IMU for this application:

- Programmable motion thresholds allow the MCU to remain in deep sleep until real movement occurs.
- Free-fall detection and activity interrupts can be used to trigger safety or emergency events.
- Its multiple interrupt pins support ultra-low-power wakeup without requiring MCU polling.

Alternatives such as the LIS3DH offer similar features, but the ADXL345 is more flexible in interrupt configuration and widely documented.

Mag: BMM150 (0.75-USD)

The BMM150 was selected to provide heading information, enabling the display's navigation features (guiding the user back to the base station).
It features:

- Low active current (170 µA)
- Low suspend current (1 µA)

- Fast wake-up time, enabling sensor-driven GPS activation only when movement resumes
- I²C & SPI compatibility with the existing sensor bus

Its price (0.75 USD) makes it a cost-effective choice compared to more feature-rich but significantly more expensive 9-axis fusion sensors (e.g., Bosch BMX160).
The combination of ADXL345 + BMM150 provides a modular IMU approach, allowing the system to enable only the sensors needed at a given time, thereby improving overall energy efficiency compared to always-on fusion IMUs.

GPS: MAX-M10S-00B (9.81-USD)

The MAX-M10S is one of the most power-efficient GNSS modules available, with:

- 10 mA acquisition current
- 6.5 mA tracking current
- 28 µA backup mode
- 120 nA software standby

It supports multi-constellation GNSS (GPS, GLONASS, Galileo, BeiDou), improving fix reliability with small antennas, important for a compact portable tracker.

Compared to older u-blox M8 modules, the M10 series offers significantly better energy per fix, which is essential for meeting multi-day battery life targets.

Other competitors like Quectel L76 or AT6558 may be cheaper, but they draw more current, have longer TTFF, and perform worse with compact antennas. The MAX-M10S therefore provides the best efficiency-to-performance ratio for this application.

LoRa: E22-900T22S (9.08-USD)

The E22-900T22S module was selected because it provides:

- 22 dBm transmit power for long-range connectivity
- 140 mA transmit peak, 7 mA receive, and 3 µA sleep
- UART interface for simple integration
- Air-to-Air wakeup capability to reduce idle listening
- Firmware upgrade support and dual antenna options

Alternative options include:

- Wio-E5 (STM32W-based)
  Very low current consumption (2.1 µA sleep), integrated MCU, and certified LoRaWAN stack.
  However, it is not available from JLCPCB, complicating manufacturing.
- RFM95W (SX1276-based) modules
  Compared to many SX1276-based modules from G-NiceRF, Vollgo, or RFM95W designs, the SX1262-based E22-900T22S offers up to 80% higher TX at the same power and ultra-low sleep current, which is critical for a battery-powered node deployed in remote terrain.
- SPI Based modules
  Lack the firmware and upgradeability that UART gives, with simpler firmware complexity, development time, and risk of RF config bugs. While not using as many GPIO's as SPI and I2C and UART at the same time.
- Shield/unshielded
  The E22 module is shielded and in a rather compact case, giving both good RF and having an integrated antenna making it capable of redundant operations.

The E22-900T22S was selected over alternative LoRa modules (Wio-E5, RFM95W/SX1276, G-NiceRF, Vollgo) because it combines a modern, low-power SX1262 transceiver with higher TX power (22 dBm), very low sleep current, and a simple UART serial interface in a shielded SMD module. This significantly reduces firmware and RF-layout complexity while still providing the long-range performance required for communication between battery-powered nodes in mountainous or forested terrain and a base station, and integrates cleanly into a custom PCB manufactured at JLCPCB.

Battery charger: BQ25185 (1.71-USD)

One cell LiPo battery charger with powerpath, battery tracking and a linear battery charger.
This one was chosen because it has voltage dynamic power management (VINDPN).
It varies the amount of voltage and current to optimize wattage, which is good for circuits with varying sources (solar), so the module runs optimally all the time. While also making sure the system can be recharged or powered using USB-type-C. And has a very low power consumption of 4-uA in Battery Only mode.

Buck Converter: TPS62821 (0.40-USD)

The system runs from a 1-cell Li-ion battery (4.2–3.0 V) and needs a regulated 3.3 V rail for MCU, GNSS, LoRa and sensors, so the main

choice is an LDO or a buck converter. For an LDO, the efficiency is roughly $\eta LDO \approx Vout/Vin$: at 4.2 V this gives $\eta \approx 3.3/4.2 \approx 79\%$, at 3.7 V $\eta \approx 3.3/3.7 \approx 89\%$, and only near 3.3 V does it approach 100 %, right before dropout. During a typical GNSS + LoRa event the load is on the order of 120 mA at 3.3 V, so $Pout \approx 3.3 \cdot 0.12 = 0.40\ W$. With an LDO at 4.2 V, $P_{in} \approx 0.40/0.79 \approx 0.51\ W$, so about 0.11 W (≈21 %) of the battery power is lost as heat in the regulator. With a buck at 90 % efficiency, $P_{in} \approx 0.40/0.90 \approx 0.44\ W$, so the loss is only 0.04 W (≈10 %); the **conversion loss is reduced by roughly a factor of 3** and the overall input power drops by about **14 %** compared to the LDO. Over many high-current tracking/transmit events per day, this directly translates to noticeably longer runtime or allows more frequent updates for the same battery size. The buck also keeps 3.3 V regulated even when the battery is below 3.3 V, effectively using more of the cell's capacity than an LDO, which would be in dropout in that region.
In low-power modes the average current is in the tens of µA range, so the regulator's quiescent current matters; the chosen buck has Iq of a few µA active and tens of nA in shutdown, comparable to or better than a typical low-power LDO, so there is no real penalty in standby. The main downside of the buck is slightly higher complexity (inductor, more passives, careful layout, potential switching noise), but the added BOM and layout effort are small relative to the rest of the design. Overall, for this GNSS/LoRa tracker with 100+ mA peaks and strict battery-life requirements, the buck converter provides clearly higher efficiency (≈10–20 percentage-points better than an LDO over much of the battery range), reduced heat, and better use of the battery voltage span, while keeping quiescent current and complexity at an acceptable level.

Overall price: 27.85 USD
Although the combined cost of the major components is relatively high, each part was selected because lower-cost alternatives fail to meet the strict project requirements for long-range communication, GNSS performance, ultra-low-power operation, and USB-C safety. The chosen components represent the lowest-cost configuration that still achieves reliable multi-month battery life, robust connectivity, and long-term product stability from highly reputable vendors.

Power budget and battery life analysis

To evaluate the power budget most accurately, we would normally calculate in watts, since voltage and current can vary, and wattage reflects their combined effect. However, we chose to rely on mAh instead, as all components operate at 3.3 V while the battery is rated at 3.7 V. The voltage swing of the battery (from 3.2 V to 4.2 V) makes the difference negligible. Using mAh also provides a margin of safety, since the actual battery capacity is slightly higher than what we calculate when assuming 3.3 V. The current consumption of all active components can be seen in the table hereunder, with active and sleep currents, small notes can be read besides the sleep current.

Component	Active [mA]	Sleep [mA]	Notes
MCU: ESPRESSIF-S3	16.2 Tx Peak: 355 Rx Peak: 97	**0.008**	Active is 40 MHz Dual-core CPU-running mode; sleep is deep-sleep with most blocks off.
IMU: ADXL345BCCZ-RL7	0.023	**0.0001**	Active is normal measurement mode; sleep is standby with almost no current.
Mag: BMM150	0.17	**0.001**	Active is low-power measurement mode; sleep is suspend mode.
GNSS: MAX-M10S	10 acq 6.5 track	**0.028**	MAX-M10S backup mode: 28 µA, SW standby: 120 nA. To keep TTFF reasonable, backup mode is used in all "sleep" states
LoRa: E22-900T22S	TX: 140, RX: 7	**0.003**	Active depends on TX or RX; sleep mode is controlled by commands.

Battery charger: BQ25185	0.75	**0.004**	Active is input-powered charging state; sleep is battery-only mode.
Buck Converter: TPS62821	0.004	**0.00005**	Active is enabled with light load; sleep is shutdown with EN pin low.

A 2500 mAh 18650 BetterESS cell was chosen not because the electronics require it to function, but to guarantee multi-week battery life even under worst-case use (frequent GPS + LoRa + daily WiFi configuration). Smaller cells (e.g., 1000–1500 mAh) would technically work, but would reduce worst-case runtime to less than two weeks and leave less margin for aging, temperature effects, and user behaviour.

Armed

Between GPS/LoRa events in the "active" part of the day
ADXL345 in measurement mode (always-on motion detection)
Rest in Low Power / Suspend / Sleep
$I_{idle} = 0.067\ mA$

Storage

"Night" / non-active part of the day (no tracking use)
All in Low Power / Suspend / Sleep
$I_{sleep} = 0.044\ mA$

Tracking

One "position + uplink" event
For each reporting interval, the device:

1. Wakes MCU + sensors
2. Powers GPS for a fix
3. Sends one LoRa packet

GPS acquisition time: 30 s (cold/warm-ish start)
LoRa communication duration: 3 s total

- 2 s TX at 22 dBm
- 1 s RX / overhead

Phase 1 GPS acquisition (30 s)

MCU active, GPS acquisition, IMUs active, LoRa sleeping
$I_{phase1} = 26.4\ mA$

Phase 2 LoRa TX/RX (3 s)

MCU active, GPS tracking, IMUs active, LoRa mostly T
$I_{phase2} = 118.6\ mA$

Full event cost

A full event from waking the MCU, getting a GNSS link and sending a LoRa packet will have a total consumption of:
0.32 mAh per fix + uplink

Calculations for battery lifetime

Calculating the battery lifetime is done by dividing our battery capacity by either our idle current or our sleep current.

$T_{life_{idle}} = Bat_{cap} / (I_{idle} \cdot 24h) = 1550\ days$
$T_{life_{sleep}} = Bat_{cap} / (I_{sleep} \cdot 24h) = 2360\ days$

Here the battery degradation and discharge would dominate the lifetime of the product.

Mixed use case

We will now calculate how much is consumed per day, in different cases.
General notation:

- T_{active}: "tracking window" per day (either 14 h or 7 h)
- $T_{sleep} = 24 - T_{active}$
- Reporting interval: Δt (5, 10, 30, 60 min)
- Number of events per day:
  $N = \frac{T_{active} \cdot 60}{\Delta t}$
- Total time spent in events:
  $t_{event} = 0.00917\ h\ \ (33s)$
  $T_{events} = N \cdot t_{event}$
- Time in "between" state during active window:
  $T_{between} = T_{active} - T_{events}$
- Daily charge consumption:
  $Q_{day} = I_{between} \cdot T_{between} + I_{sleep} \cdot T_{sleep} + N \cdot Q_{event}$
- Average current:
  $I_{avg} = \frac{Q_{day24}}{24}$
- Battery life
  $T_{life} = \frac{2500\ mAh}{Q_{day}}$

All numbers below are **based on those formulas**.

Two use cases is shown and calculated for:
Tracking window 14 h/day
Night no tracking 10 h/day

Interval	Events/day	Avg current (I_{Avg}) [mA]	Use per day [mAh]	Battery life [days]	Rough time

5 min	168	2.29	54.84	**45.6**	1.5 months
10 min	84	1.17	28.11	**88.9**	3 months
30 min	28	0.43	10.29	**242.9**	8 months
60 min	14	0.26	6.20	**403.2**	1.1 years

Tracking window 7 h/day
Night no tracking 17 h/day

Interval	Events/day	Avg current (I_{Avg}) [mA]	Use per day [mAh]	Battery life [days]	Rough time
5 min	84	1.17	28.08	**89.4**	3 months
10 min	42	0.61	14.59	**171.4**	5.6 months
30 min	14	0.24	5.68	**440.5**	1.2 years
60 min	7	0.14	3.45	**725.2**	2.0 years

OLED and WIFI/BLE

These numbers do not take into an account the OLED display or the WIFI/BLE being used to communicate with the module. Therefor a little section here takes a look at a 30 minute interaction with the module using either or both at the same time:

WIFI and BLE power consumption depends on power output and mode, we choose typical values so the average for consumption and gets:
$I_{Wifi} = 100\ mA$
The OLED screen is small and not power hungry giving us a moderate brightness power consumption of:
$I_{OLED} = 20\ mA$

Together with an active MCU we will have a current draw of:
$I_{Interact} = 136.2\ mA$
If we use these features for 30 minutes we would use $68.1\ mAh$
which is a bit more than using the other features every 5 minutes for 14 hours. Therefore heavy use of the Wifi and OLED screen would decrease battery lifetime.

Solar enabled tracker

This is a Solar LoRa GNSS tracker, therefore we will also look at the power we get from a solar panel. The solar panel used is a 5V 0.5A solar cell. If we wear the solar panel on a backpack it would not be effective and not point towards the sky, we therefore give it a usable output of 20-40% on average, with 4-6 hours of peak sun per day. If we take into an account the low effectivity we get:

Condition	Usable "full" sun hours	Daily Ah	Daily mAh
Poor/urban walking	1 hr	0.5 Ah	500 mAh
Good conditions	1.5 hr	0.75 Ah	750 mAh
Excellent hiking conditions	2 hr	1 Ah	1000 mAh

This is with 20-40% effective sun and a perfect MPPT circuit and no losses in step-down DC-DC circuit and cables. Therefore we could get less. But if the panel was laid out in the perfect sun overhead we would get:

3000 mAh in a day with 6 hours of sun.

so with excellent hiking conditions we would be able to use 5 min tracking intervals, wifi and OLED for 14 hours without using any battery power and only sun.